Drain valve type AV580, AV585

Application and function

The drain valve is used to drain instruments or to drain fillings of instruments. The area of application comprises with the entire product range of float switches.

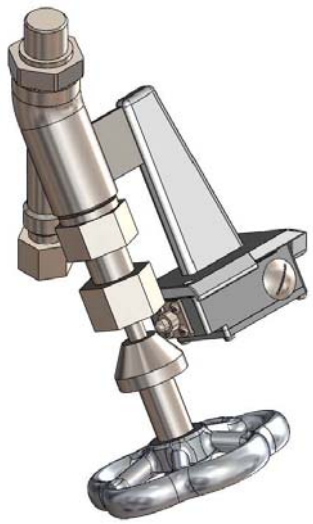

Technical basic equipment

- Inlet: male thread G ½
- Outlet: cutting ring connection ø 12 mm (DIN 2353-DS12)
- Body material: carbon steel as per DIN or ASME
- Inner parts of valve: stainless steel,
- Handwheel carbon steel (up to PS = 32 bar)
  resp. aluminium up to PS = 200 bar

Technical data
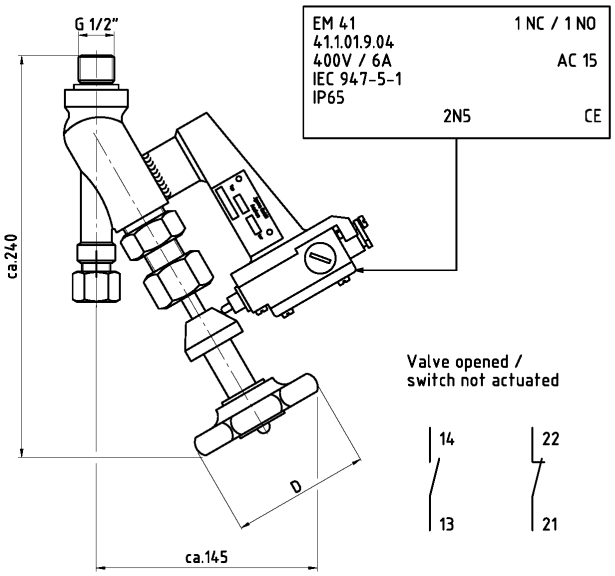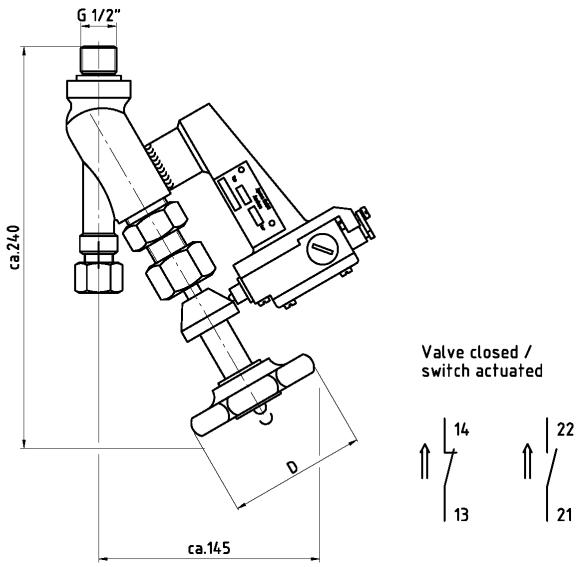
		AV580		AV585				
Allowable pressure	PS [bar]	20	32	50	80	100	160	200
Allowable temperature	TS [° C]	215	239	265	296	312	348	367
Handwheel	ø [mm]	80		110				
Cable gland		M16x1,5 as per DIN46320